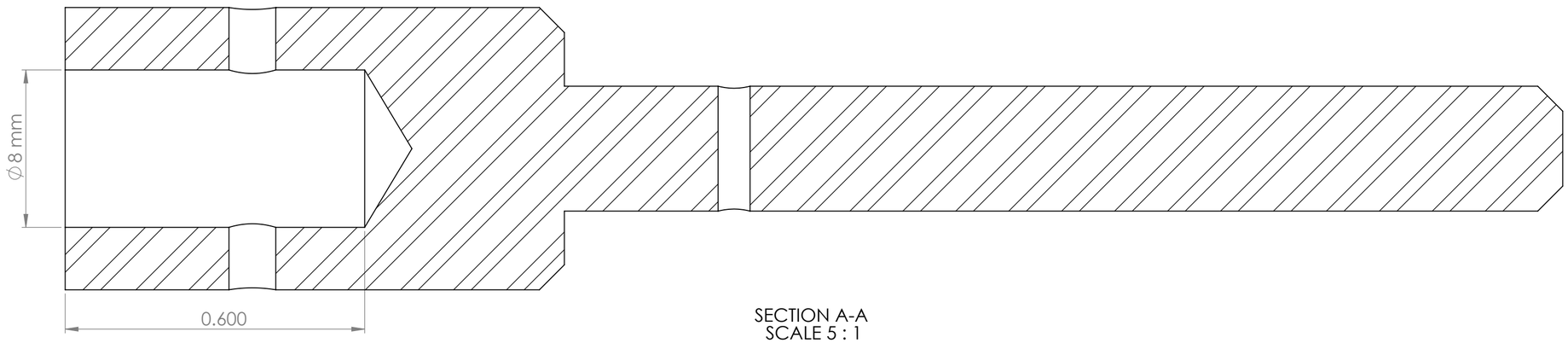

SECTION A-A
SCALE 5 : 1

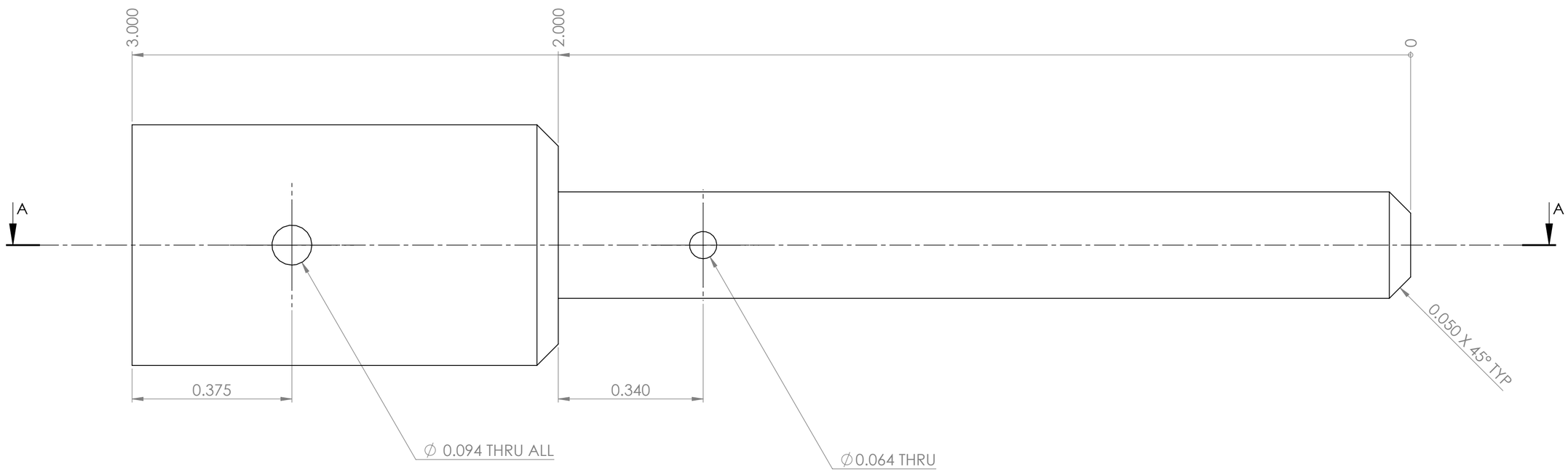

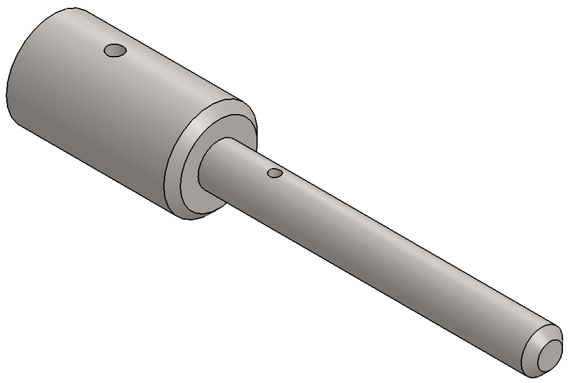

PROPRIETARY AND CONFIDENTIAL

THE INFORMATION CONTAINED IN THIS DRAWING IS THE SOLE PROPERTY OF JON TORREY. ANY REPRODUCTION IN PART OR AS A WHOLE WITHOUT THE WRITTEN PERMISSION OF JON TORREY IS PROHIBITED.

NEXT ASSY	USED ON
APPLICATION	

UNLESS OTHERWISE SPECIFIED:

DIMENSIONS ARE IN INCHES
TOLERANCES:
TWO PLACE DECIMAL ±0.01
THREE PLACE DECIMAL ±0.005

INTERPRET GEOMETRIC TOLERANCING PER: ISO

MATERIAL
Plain Carbon Steel

FINISH

DO NOT SCALE DRAWING

	NAME	DATE
DRAWN	J.TORREY	4/3/11
CHECKED		
ENG APPR.		
MFG APPR.		
Q.A.		

COMMENTS:

TITLE:

LOWER SHAFT COUPLER

SIZE	DWG. NO.	REV
C	BSC	

SCALE: 2:1 | WEIGHT: 0.08 | SHEET 1 OF 1